1

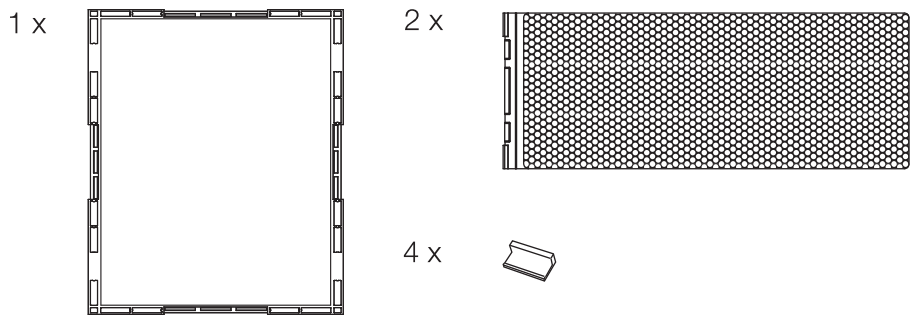

2a

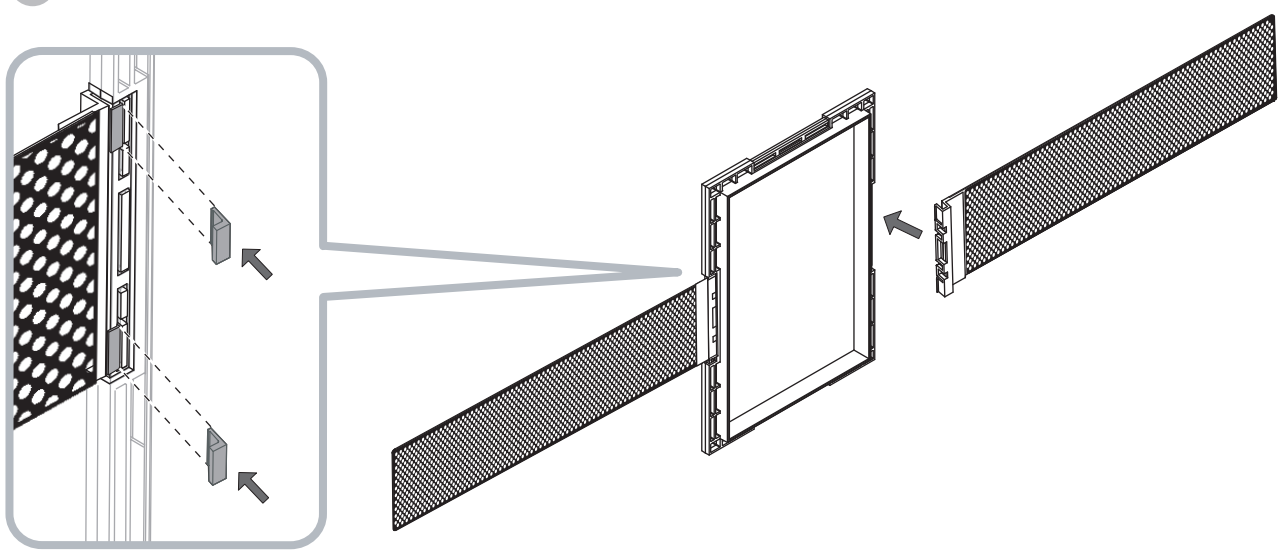

2b

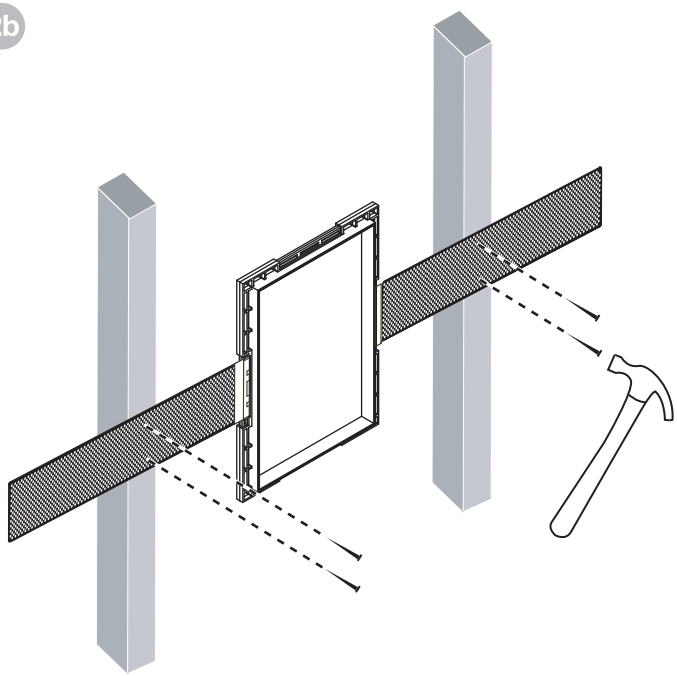

2c

PMK W6

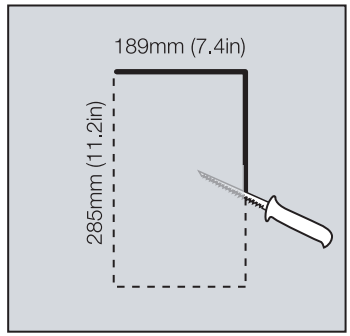

PMK W5

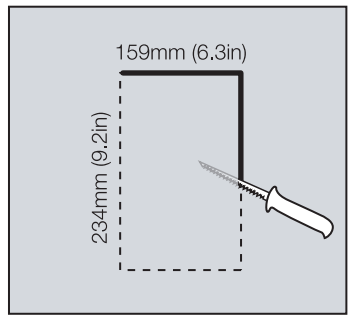

2d

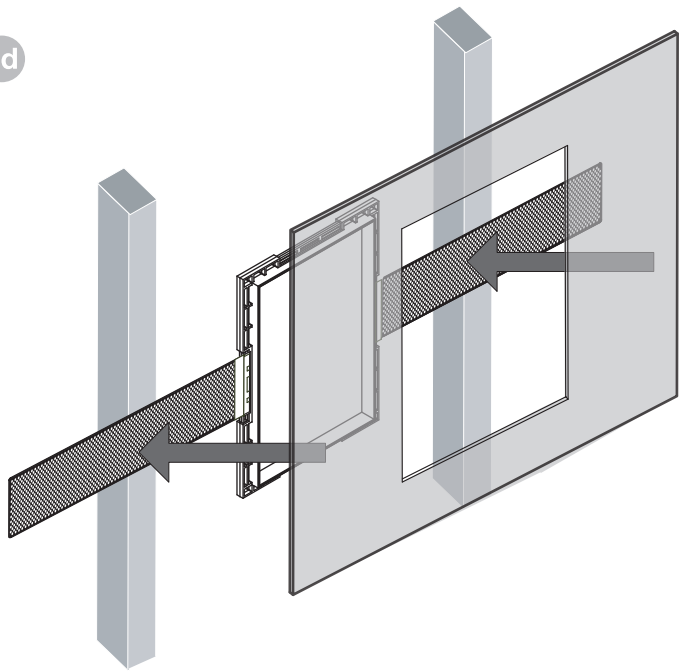

3a

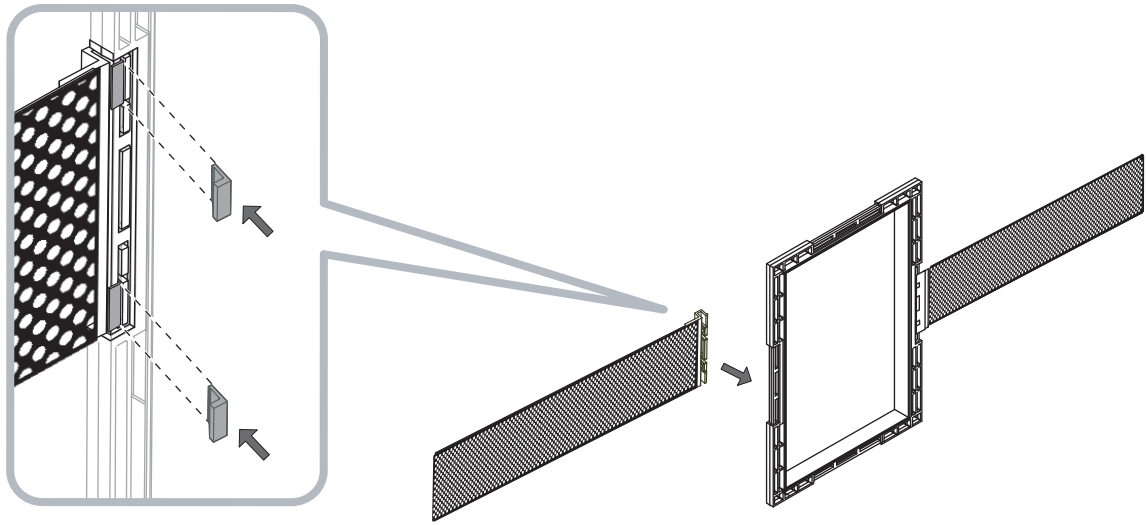

3b

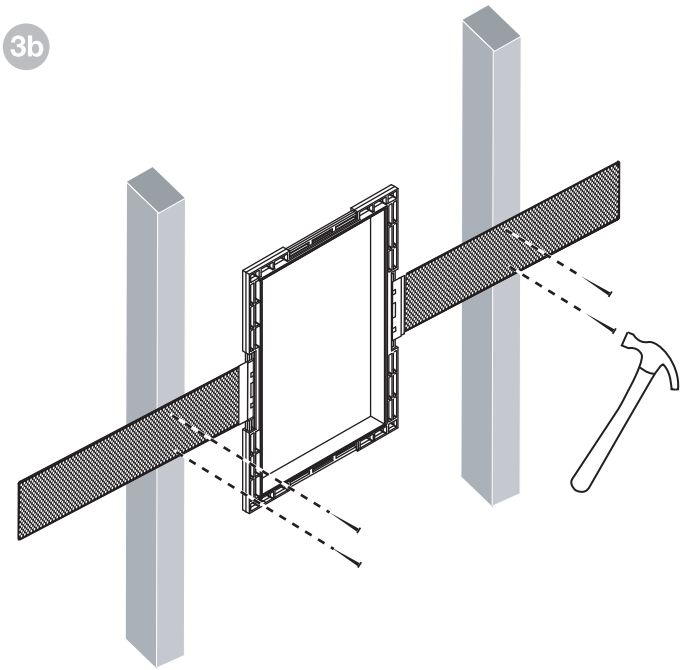

3c

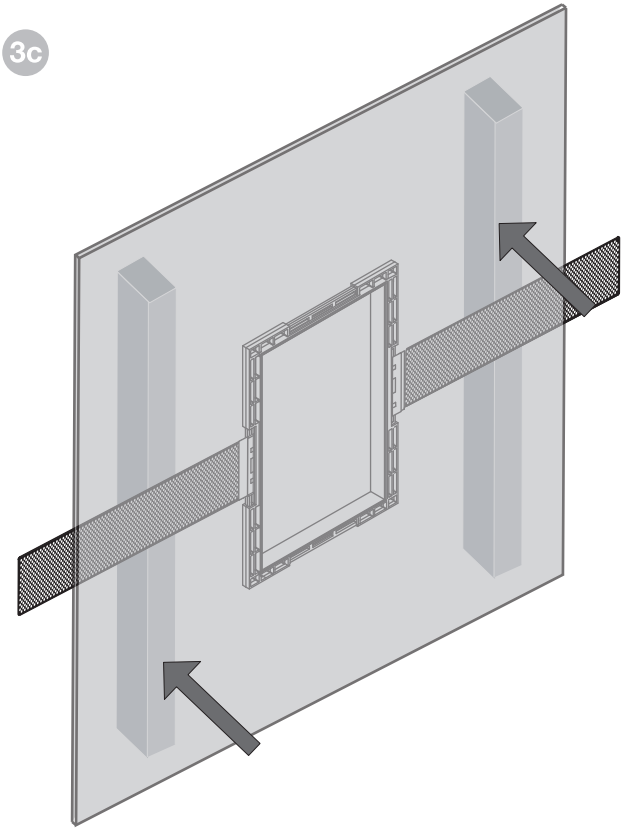

II12807 Issue 1

Bowers & Wilkins

B&W Group Ltd
Dale Road
Worthing West Sussex
BN11 2BH England

T +44 (0) 1903 221 800
F +44 (0) 1903 221 801
info@bwgroup.com
www.bowers-wilkins.com

B&W Group (UK Sales)
T +44 1903 221 500
E uksales@bwgroup.com

B&W Group North America
T +1 978 664 2870
E marketing@bwgroupusa.com

B&W Group Asia Ltd
T +852 3 472 9300
E info@bwgroup.hk

Copyright © B&W Group Ltd. E & OE

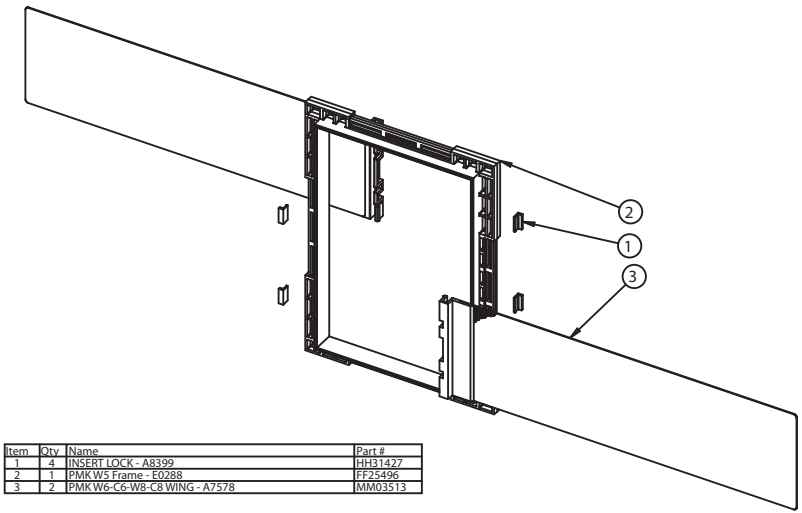

Item	Qty	Name	Part #
1	4	INSERT LOCK - A8399	HH31427
2	1	PMK W5 Frame - E0288	FF25496
3	2	PMK W6-C6-W8-C8 WING - A7578	MM03513

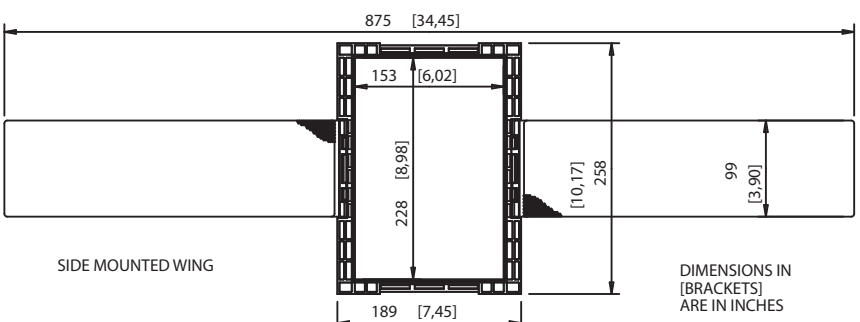

SIDE MOUNTED WING

DIMENSIONS IN
[BRACKETS]
ARE IN INCHES

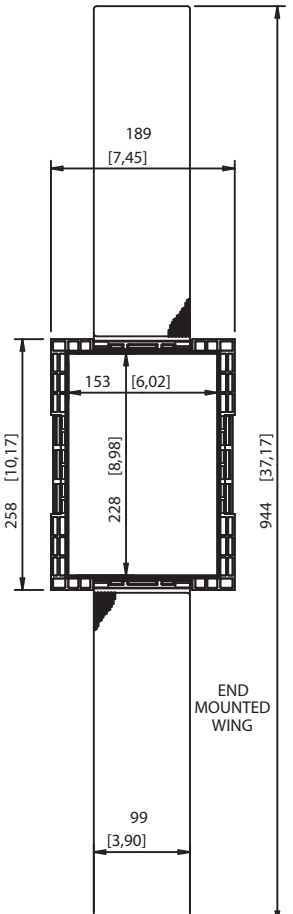

END
MOUNTED
WING

ISSUE HISTORY

ISS	ECR/SAN NUMBER	REQ
1		JG
DRN	DATE	CKD
RM	20.11.09	

ISSUE DETAILS:

ISSUED FOR COST
& FEASIBILITY

ISS	ECR/SAN NUMBER	REQ
2		WC
DRN	DATE	CKD
RM	4.1.10	

ISSUE DETAILS:

EXTRA CORING AROUND
WING SLOTS ADDED ON
FRAME MOULDING

IF IN DOUBT ASK
ALL COMPONENTS MUST BE RoHS COMPLIANT

B&W
Bowers & Wilkins

MATERIAL	FINISH	TITLE	FIRST DRAWN BY	COPYRIGHT C	DOC PART NO.
-	-	W5 PMK ASSY/LINE DRG	RM	2009 B&W GROUP LTD	DOC_PART_NUMBER
			DATE 20.11.09	SCALE NTS	DRG SIZE A3

PART NO. FP30104

3-D DATA FILE NO N/A -ISS- -

2-D DRG. NO. SHEET OF
E0289-1-1 –ISS –2