CCM6

Welcome to Bowers & Wilkins and the CCM6 Series

Thank you for choosing Bowers & Wilkins. When John Bowers first established our company he did so in the belief that imaginative design, innovative engineering and advanced technology were keys that could unlock the enjoyment of audio in the home. His belief is one that we continue to share and it inspires every product we design.

The CCM6 Series of ceiling mount speakers is designed to offer easy installation and high quality audio reproduction for discrete custom install applications. This manual describes the installation of CCM6 Series speakers within conventional stud and sheetrock (joist and plasterboard) ceilings. It begins by listing the contents of the CCM6 series carton.

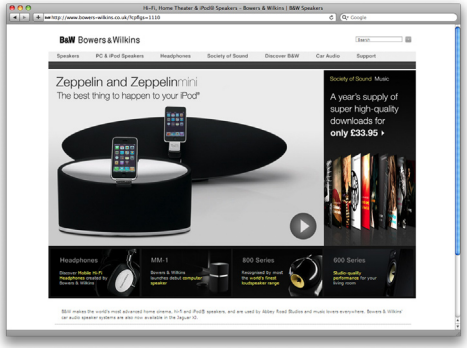

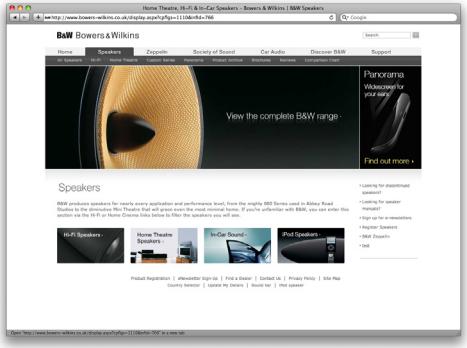

www.bowers-wilkins.com

1. CCM6 Carton Contents

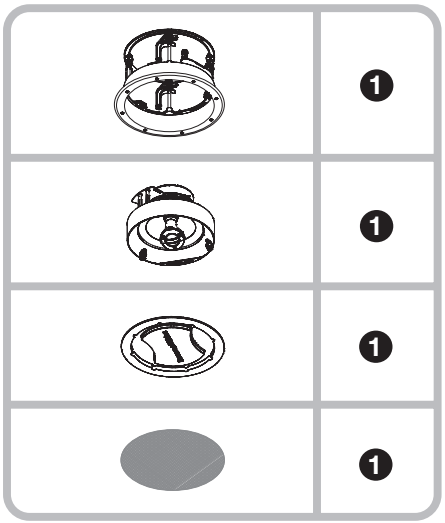

- CCM6 Series speaker assembly (baffle, frame and bezel, grille)
- Cut-out template
- Paint mask
- Document pack containing Quick Start Guide and Warranty information

Environmental Information

All Bowers & Wilkins products are designed to comply with international directives on the Restriction of Hazardous Substances (RoHS) in electrical and electronic equipment and the disposal of Waste Electrical and Electronic Equipment (WEEE). These symbols indicate compliance and that the products must be appropriately recycled or processed in accordance with these directives. Consult your local waste disposal authority for guidance.

2. CCM6 Series Basics

CCM662, CCM663, CCM664, CCM665, CCM663SR, CCM664SR

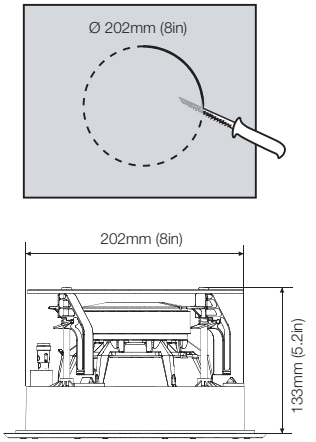

CCM6 Series ceiling mount speakers comprise a baffle carrying the speaker drivers and crossover, a mounting frame (with integrated bezel), and a magnetically secured grille. The frame is connected via side mounted terminals to the speaker cables, with the baffle connecting automatically as it is inserted in the frame.

Note: A square grille is optionally available for CCM6 Series speakers. Contact your local Bowers & Wilkins retailer for more information.

CCM6 Series speakers require ceiling aperture dimensions described in the following table:

Model	Aperture Diameter
CCM662	202mm (8 in)
CCM663	202mm (8 in)
CCM664	202mm (8 in)
CCM665	202mm (8 in)
CCM663SR	202mm (8 in)
CCM664SR	202mm (8 in)
CCM682	251mm (9.9 in)
CCM683	251mm (9.9 in)
CCM684	251mm (9.9 in)

CCM682, CCM683, CCM684

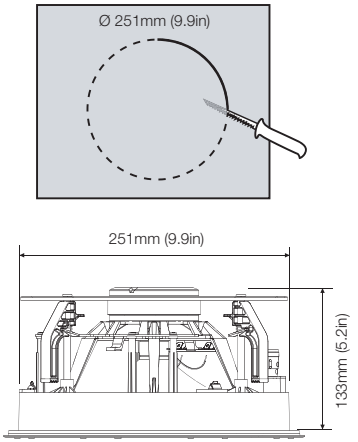

All CCM6 Series speakers require clear depth behind the sheetrock (plasterboard) of 140mm (5.51 in). The diagrams above illustrate these dimensions.

Note: If CCM6 Series speakers are to be installed in "new build" projects, pre-mount kits and back boxes are available. Contact your local Bowers & Wilkins retailer for more information.

Before installing CCM6 Series speakers you should ensure that the ceiling locations chosen are free of obstructions such as pipe work, ducting or wiring that will interfere with the installation. In existing dry-wall construction, use a stud-finding tool to help you map the ceiling construction and a pipe detector to scan the proposed installation locations.

The appropriate position for CCM6 Series speakers within the listening environment will depend on their specific application:

General Background Audio Applications:
For applications where single CCM6 Series speakers are required to operate independently to provide background audio, they can be located substantially as installation convenience and architecture dictate. The only acoustic constraint to bear in mind is that corner locations will result in significantly emphasised low frequencies and should be avoided.

Stereo Audio Applications:
For applications where a pair of CCM6 Series speakers is to be used for conventional stereo reproduction, they should be located between 3m (10 ft) and 5m (16.5ft) apart and a similar distance in front of the listening area. Try to avoid corner locations for the speakers and to ensure that acoustic environment around each speaker is similar.

Note: Different acoustic environments might be, for example, a bare wall and a heavily curtained window.

Multi-channel Audio Applications
For applications where multiple CCM6 Series speakers are to be used for multi-channel audio visual systems, the front and centre speakers should be located approximately 0.5m (20 in) in front of the plane of the screen. The centre speaker should be on the centre line of the screen and the front speakers each laterally within approximately 0.5m (20 in) of the sides of the screen. Surround channel CCM6 Series speakers should be located just behind and either side of the listening position. Try to avoid corner locations for any of the speakers and to ensure that the acoustic environment around each front and surround speaker is similar.

Note: Different acoustic environments might be, for example, a bare wall and a heavily curtained window.

The high frequency radiation characteristics of some CCM6 Series models can be adjusted by tilting their tweeters. In these cases, CCM6 Series speakers should be oriented so that the red arrow on the frame flange points towards the listening area. Tweeter tilting is also accompanied on some models by corresponding equalisation options selected via a switch on the baffle. See Section 4.8 for more information.

Note: The nature of the installation of ceiling speakers means that it is sometimes impractical to locate them in an acoustically ideal position. In these cases they should be located as close as is practical to the ideal positions. Your local Bowers & Wilkins retailer will be able to offer advice if required.

Note: CCM6 Series drive units create stray magnetic fields. We recommend that magnetically sensitive items such as CRT screens and magnetic cards for example, are kept at least 0.5m (20 in) from the speaker. LCD, OLED and plasma screens are not affected by magnetic fields.

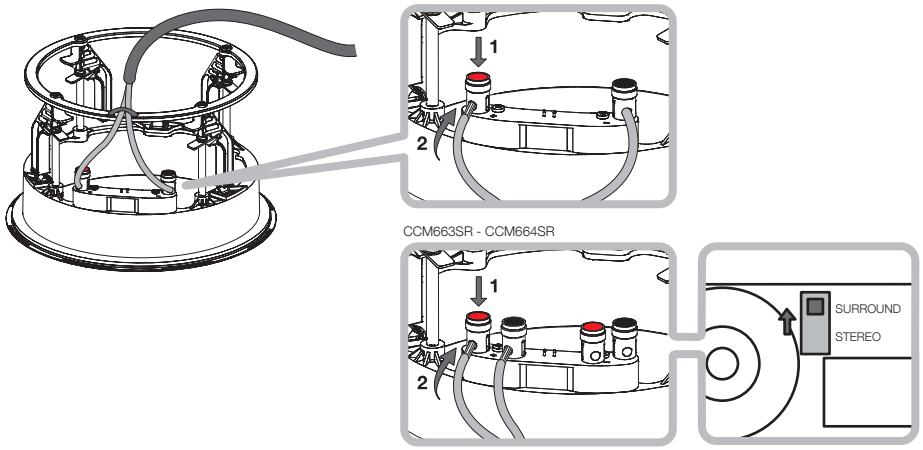

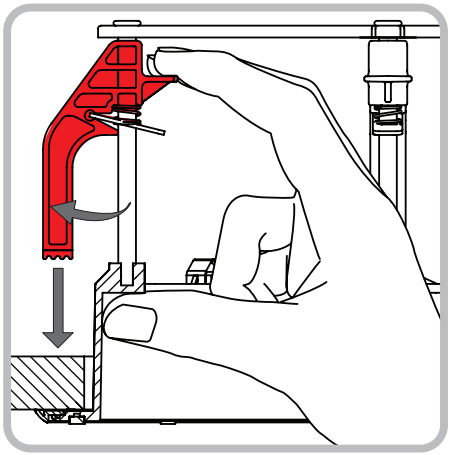

To install a CCM6 Series speaker proceed as described in the following paragraphs:

4.1 Using the supplied cut-out template, mark a cut line on the existing ceiling. Check the cut line defines the correct diameter. Cut along the line with an appropriate tool to create a round aperture in the ceiling.

Note: Ensure that there is enough free space internally adjacent to the aperture for the spring clamps.

Note: To reduce the possibility of the ceiling buzzing or rattling, adhesive mastic can be applied between the studs and sheetrock in the vicinity of the speaker aperture.

4.2 If speaker cable is already present in the ceiling space, pull the cable down through the aperture. If speaker cables are not already installed this should be done at this stage. It is likely that you will need to gain access through the floor above to route the cables through the ceiling space.

Leave enough spare cable through the aperture to ease connection to the speaker back box, but not so much that it is likely to buzz or rattle when pushed back up into the ceiling space. Approximately 1.0m (3 ft) is appropriate.

Note: Always use high quality, low resistance speaker cable. Low resistance is especially important if the length of cable from amplifier to speaker exceeds 5m. Your local Bowers & Wilkins retailer will be able to offer advice on speaker cable selection if required.

4.3 Now connect the speaker cable to the spring terminals on the side of the frame. Ensure that the speaker connection polarity is correct: the cable connected to the positive terminal on the amplifier should be connected to the red spring terminal on the frame. Similarly, the cable connected to the negative terminal on the amplifier should be connected to the black spring terminal on the frame. The diagram above illustrates cable connection.

When connecting a CCM664SR or CCM663SR in surround mode, simply connect the speaker cable to either the left or right set of terminals. Please ensure that the switch on the back is set to surround.

Note: If an amplifier is already connected to the cable it should be switched off while connections are being made to the frame.

4.4 With the frame connected it may be lifted up into the ceiling aperture. On speakers with tilting tweeters, correct frame orientation must be established at this stage: the red arrow on the frame flange should be pointing towards the listening area.

Ensure that the four QuickDog™ (spring clamps) are rotated so that they will pass through the aperture then lift the frame up so that the flange is flush on the ceiling. Take care that the cable is not trapped. Now reach inside the aperture with one hand, rotate the QuickDogs™ outwards and, using two fingers and thumb, pull each QuickDog™ downwards so that the frame is fixed securely. The diagram above illustrates insertion of the frame.

Note: To release a QuickDog™ push the metal tab, located just below the finger platform, upwards.

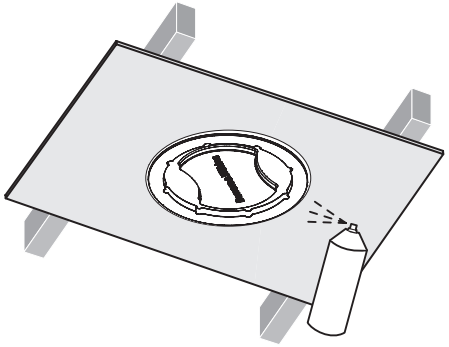

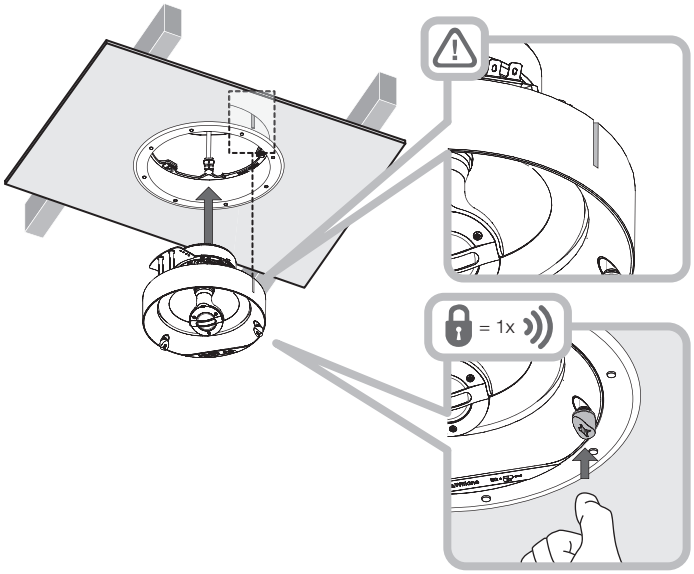

4.5 If the frame flange is to be painted it should be done at this stage. Any conventional, domestic paint may be applied by brushing, rolling or spraying. Use the supplied paint mask to avoid getting paint in the cavity. Painting without using the paint mask risks contamination of the internal connection terminals or the grille attachment magnets. The diagram above illustrates painting using the paint mask.

Note: If the grille is to be painted this should be done "off-line" before it is fitted.

Note: The bezel is loosely fitted to the frame when the speaker is shipped and can come away during handling. This is not a problem as the bezel is held in position when the QuickDogs™ are secured.

4.6 The baffle can now be fitted into the frame. Ensure that the connector on the baffle is oriented correctly with the connector in the frame. The baffle is held in the frame by three push-lock fasteners. Push-lock fasteners are secured by pushing the head inwards – either with a thumb or a screwdriver. As they secure, the fasteners will click. The baffle will then be secure in the frame. The diagram above illustrates inserting the baffle and securing the push-lock fasteners.

Note: Push-lock fasteners are released by turning anticlockwise with a screwdriver.

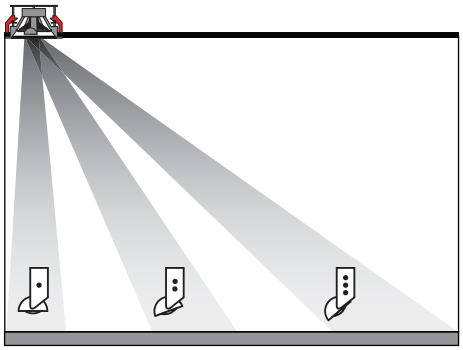

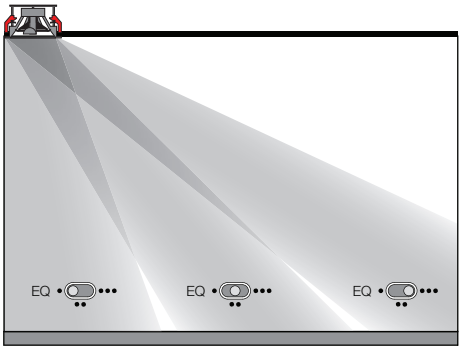

4.7 The tweeter can be tilted towards the listening position and corresponding equalisation options selected on some CCM6 Series models. The options are listed in the following table:

Model	Tweeter Tilt	EQ Options
CCM662	Yes	Yes
CCM663	Yes	Yes
CCM664	Yes	Yes
CCM665	No	No
CCM663SR	No	No
CCM664SR	No	No
CCM682	Yes	Yes
CCM683	Yes	Yes
CCM684	Yes	Yes

To tilt the tweeter simply hold it in one hand (taking care not to touch the dome) and angle it towards the listening position. Tilt angle indicators at 15° and 30° are provided, indicated by the dots on the tweeter body. The dots also correspond to the three way equalisation switch settings. Match the switch setting to the number of tilt dots. The diagram above illustrates tilting the tweeter and selecting equalisation settings.

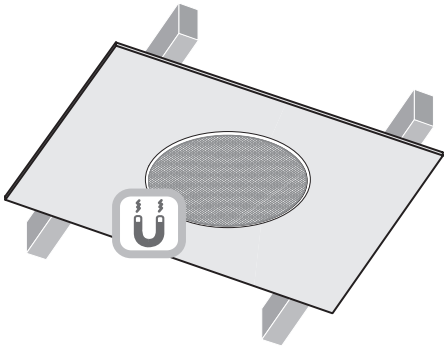

4.8 The grille can now be fitted. The grille is held in place magnetically so simply needs to be aligned with the groove in the frame flange where it will click into place. The diagram above illustrates fitting the grille.

Note: If the optional square grille is to be used the bezel must first be removed. The bezel simply pulls away from the frame. If a bezel is to be replaced it is a simple push-fit into the frame.

The CCM6 Series speaker is now installed and ready for use.

Bowers & Wilkins

B&W Group Ltd
Dale Road
Worthing West Sussex
BN11 2BH England

T +44 (0) 1903 221 800
F +44 (0) 1903 221 801
info@bwgroup.com
www.bowers-wilkins.com

B&W Group (UK Sales)
T +44 (0) 1903 221 500
E uksales@bwgroup.com

B&W Group North America
T +1 978 664 2870
E marketing@bwgroupusa.com

B&W Group Asia Ltd
T +852 3 472 9300
E info@bwgroup.hk

Copyright © B&W Group Ltd. E&OE

Bowers & Wilkins

CCM682

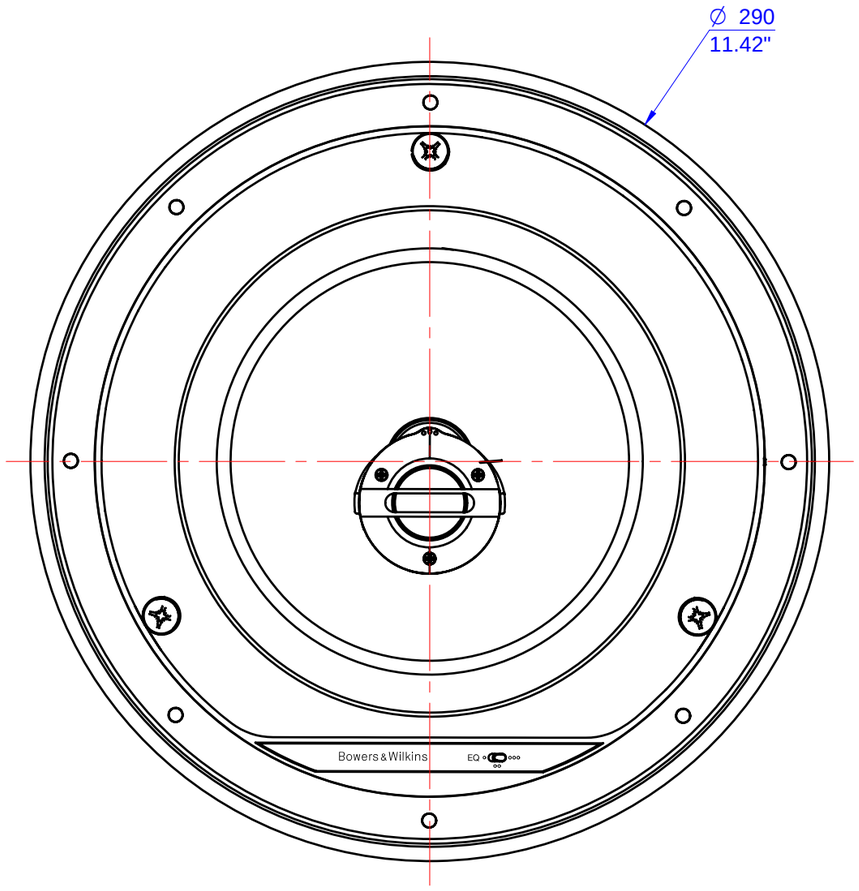

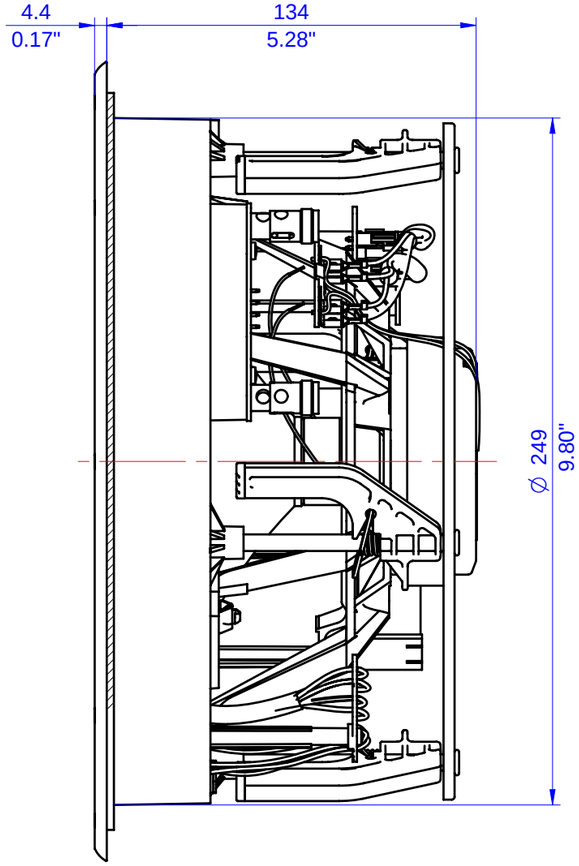

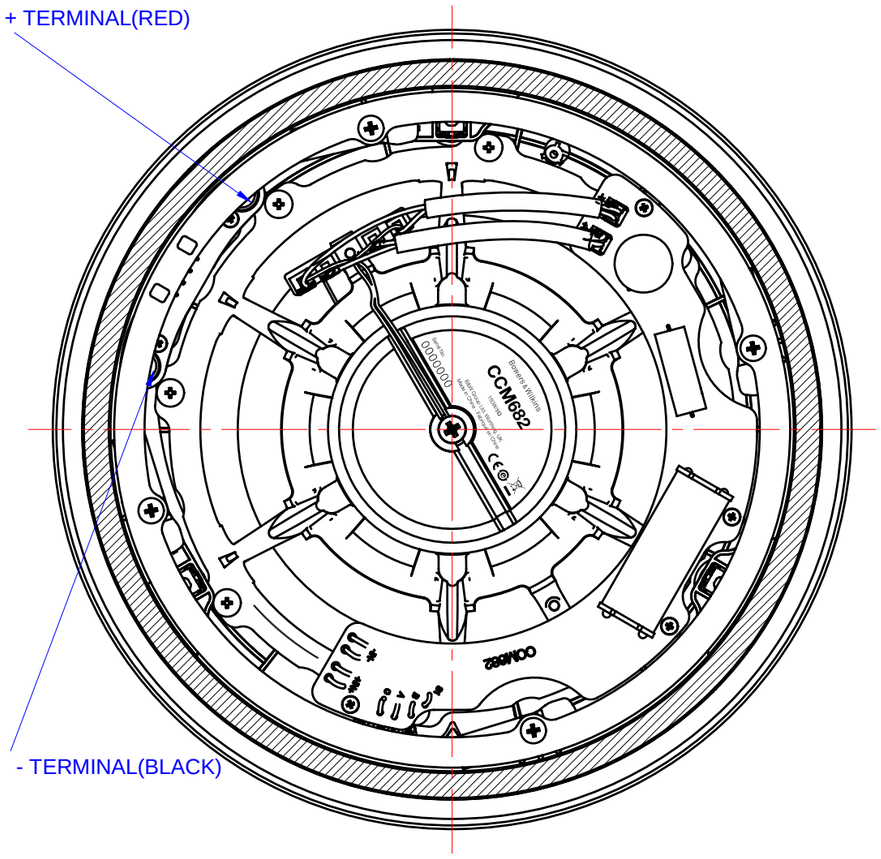

Copyright © B&W Group Ltd.